Premium




PREMIUM
Hoses & Valves
Welcome

COLORFUL



HELP YOUR CUSTOMERS DISCOVER

WHY IT IS IMPORTANT

MKT LAUNCH

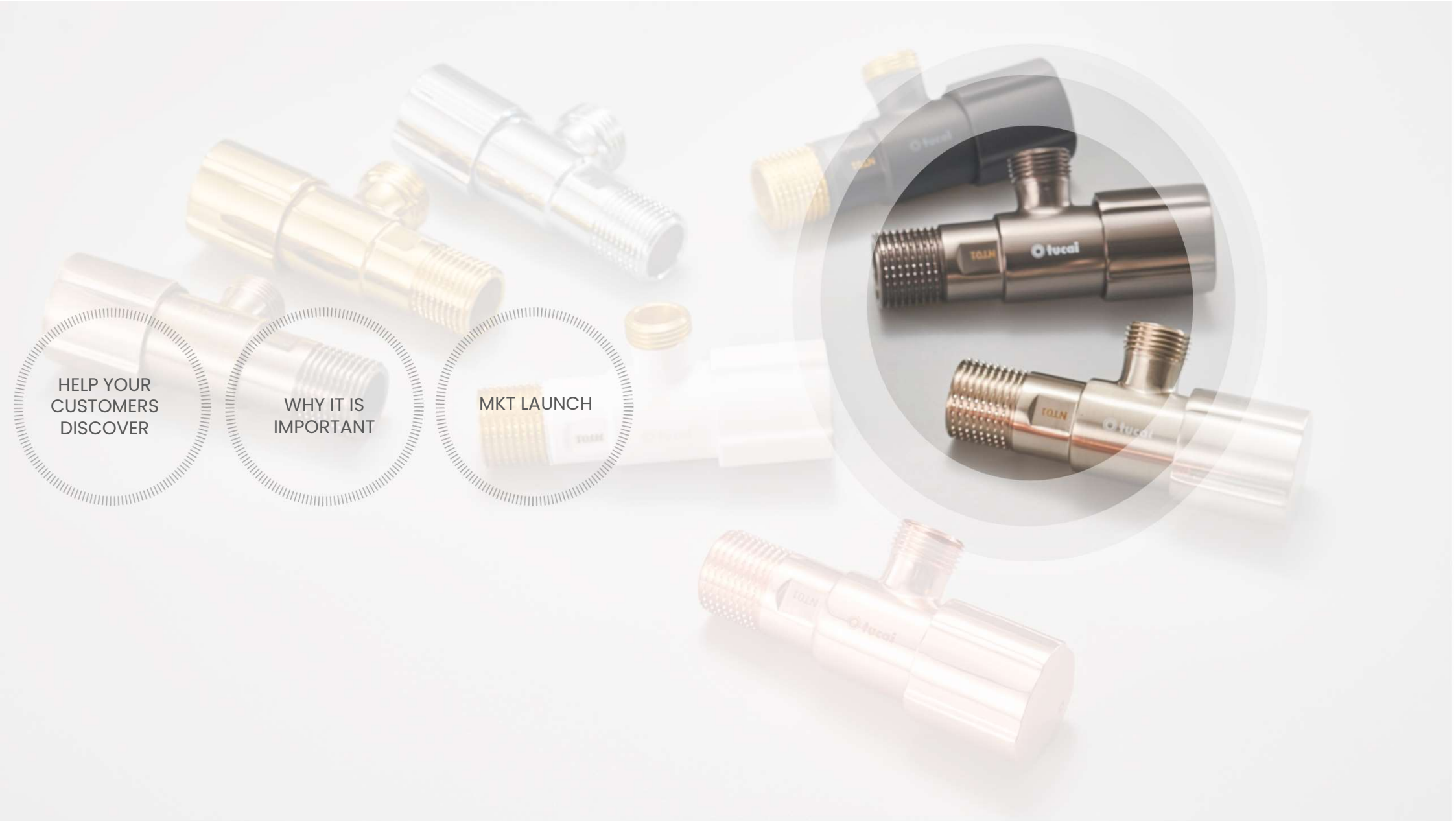

PREMIUM FAMILY RANGE

PREMIUM
Hoses & Valves



Flexible hoses
-Nut: 8 finishes
-Braiding: 2 finishes



Flexible hoses for taps
-Nut: 8 finishes
-Braiding: 2 finishes



Flexible shower hoses
-2 finishes



Ceramic angle valves
-8 finishes
-PN13

tucai®
Connecting for life

PREMIUM

Hoses & Valves

Antique bronze





Gold





Black Steel





Black matte





Chrome





White matte





Rose Gold





Brushed Steel





tucai®

Connecting for life

PREMIUM

PREMIUM
Hoses & Valves





tucai®
Connecting for life

PREMIUM

Hoses & Valves



GOLD



ROSE GOLD

tucai®

Connecting for life



CHROME



MATTE WHITE

PREMIUM

Hoses & Valves

tucai®

Connecting for life



MATTE BLACK



BRUSHED STEEL

PREMIUM
Hoses & Valves

tucai®
Connecting for life

PREMIUM

Hoses & Valves



ANTIQUE BRONZE



BLACK STEEL

tucai®

Connecting for life

APPLICATIONS

PREMIUM
Hoses & Valves















tucai®
Connecting for life

APPLICATIONS

PREMIUM
Hoses & Valves

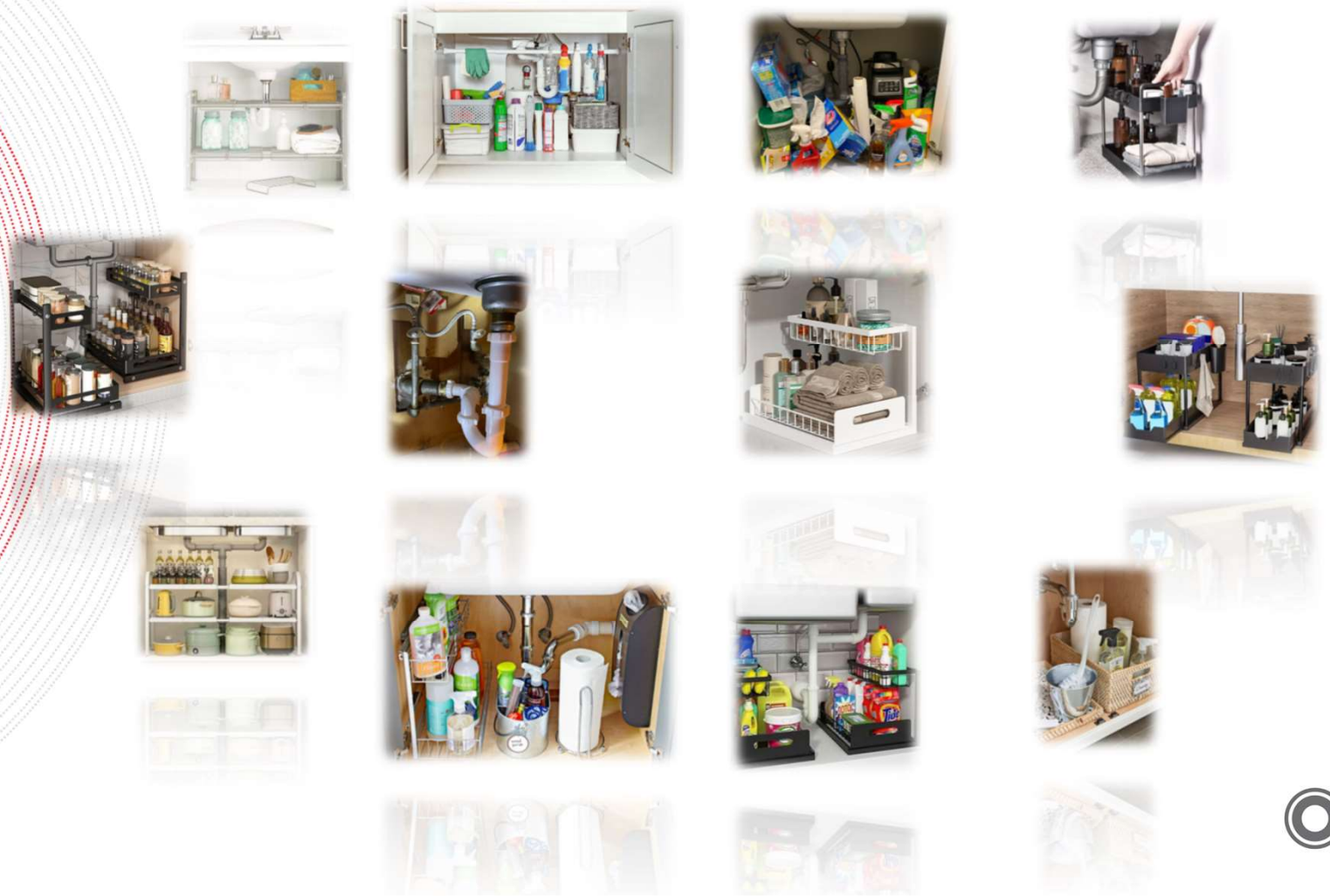

tucai®
Connecting for life

APPLICATIONS

PREMIUM
Hoses & Valves

Public bathrooms:

- Hotels
- Restaurants
- Offices
- Airports
- Etc..





tucai®
Connecting for life


PREMIUM
Hoses & Valves

TAQ PREMIUM

PREMIUM
Hoses & Valves

Female - Female



		3/8" x 3/8"								
	300	X	X	X	X	X	X	X	X	X
	400	X	X	X	X	X	X	X	X	X
	500	X	X	X	X	X	X	X	X	X
1/2" x 1/2"	300	X					X			
	400	X	X		X	X	X	X	X	X
	500	X					X			

3/8" x 3/8"

1/2" x 1/2"

tucai®
Connecting for life

TAQ PREMIUM GRIF

PREMIUM
Hoses & Valves

Female - Male

Sold in packs of 2 units

3/8" x M10x1

1/2" x M10x1



3/8" x 3/8"	300	X				X			
	400	X	X	X	X	X	X	X	X
	500	X				X			
1/2" x 1/2"	400	X				X			
	500	X	X	X	X	X	X	X	X
	600	X							

tucai®
Connecting for life

EXTENSIBLE SHOWER HOSE PREMIUM

PREMIUM
Hoses & Valves

Female - Female

1/2" x 1/2"

- 1750-2250 mm
- Metallic grey
- Matte Black



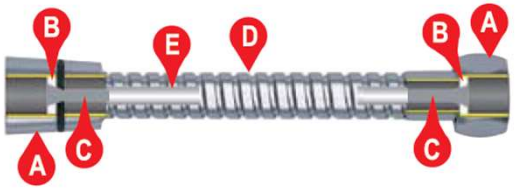

- A Plated brass
- B Plastic
- C Plated brass
- D Stainless steel
- E EPDM



Conical Nut G
Tuerca Cónica G
1/2"



Rounded Nut G
Tuerca G
1/2"

tucai®
Connecting for life



MATERIALS &
FINISHING



LONG LIFE



HEALTHY

Hoses & Valves

TAQ PREMIUM

PREMIUM
Hoses & Valves

Premium Finish - nut/sleeve

- Integrated brass premium sleeve cover
- Electrostatic powder coating: BK/WH
- Electrolytic dip coating: Other colors
- Anti-corrosion coating
- Abrasion resistance
- Perfect fit/union with Premium Valves

Easy to clean & maintain



tucai®
Connecting for life

TAQ PREMIUM

PREMIUM
Hoses & Valves

Long life - (PE-RT) Inner liner

- Antibacterial
- Corrosion, lime scaling, and deposit resistance
- Chlorine and chloramine resistance
- Anti-leak proof & Water hammer resistance (100 bar)
- Recyclable, eco-friendly material

Long life - (ACB) Braiding

- Extreme flexibility & kink prevention
- Polymeric braiding
- Anti-corrosion hose, 100% more resistant then traditional
- UV resistant

Long lasting materials & finishes

2X product life



tucai®
Connecting for life

TAQ PREMIUM

PREMIUM
Hoses & Valves

Healthy & Eco-friendly

- Fittings: Solid European brass: Drinking water approved (4MS / UBA)(ACS)
- Antibacterial inner liner
- Inner tube and packaging recyclable
- REACH & ROHS approved materials
- Inner liner 22% less carbon footprint against EPDM
- Left over production brass is recycled

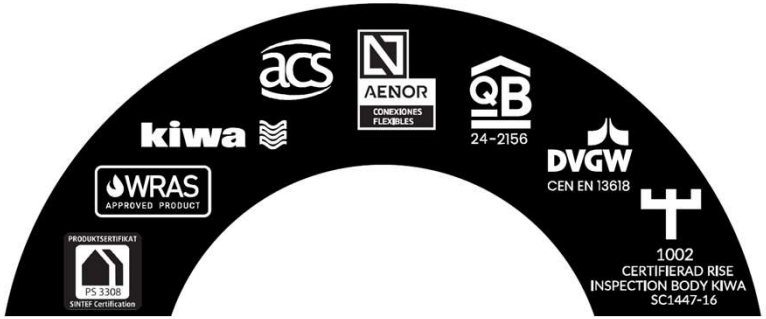

tucai®
Connecting for life

TAQ PREMIUM

Universal & Easy installation

- Extreme flexibility & kink prevention
- Universal for hot and cold connections: -20°C to 90°C
- "Plug & play": No tools or other material required
- Rubber gasket included / mounted
- Lightweight

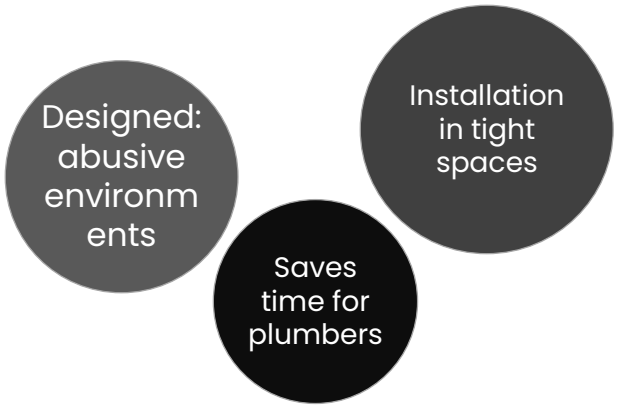


PREMIUM VALVES
PREMIUM
C-850

VALVES VALUE PROPOSITION

PREMIUM C-850

STURDINESS

Valve materials, metallic handle

ANTI-LIME MECHANISM

Safety of long-lasting operation

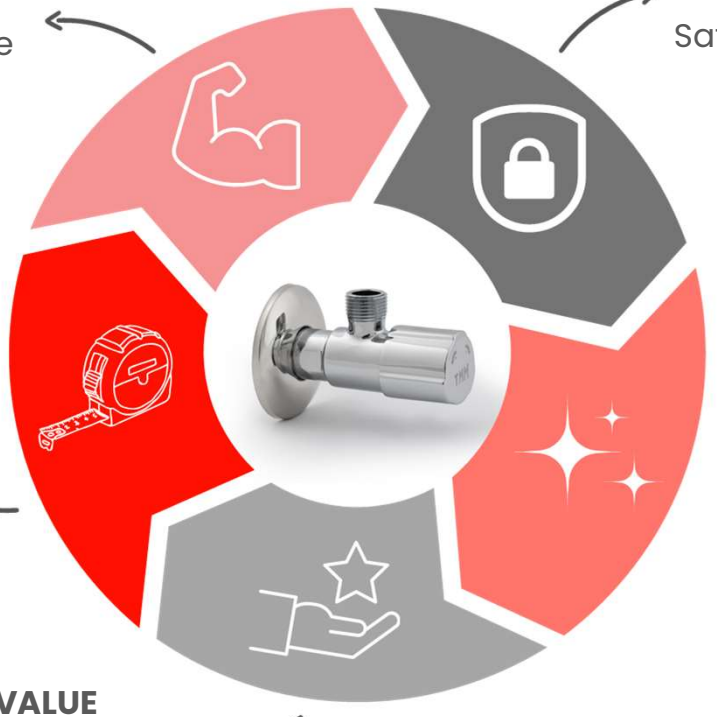

EASY INSTALLATION

Optimal dimensions, less installation time needed

ANTICORROSION BARRIER

Aesthetic durability of the product

ADDED VALUE

Design and image

tucai® Connecting for life

VALVES STRUCTURE & FEATURES

PREMIUM C-850

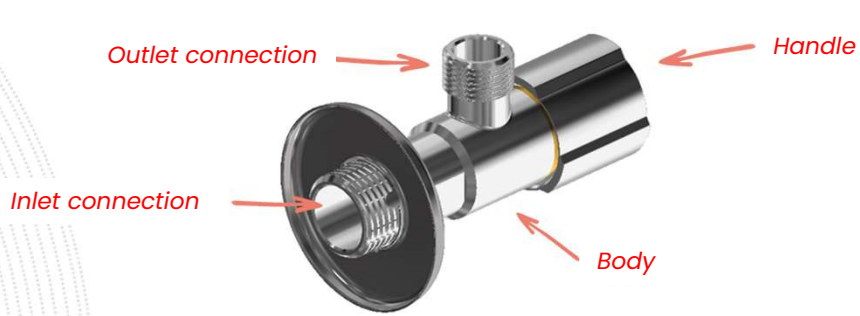

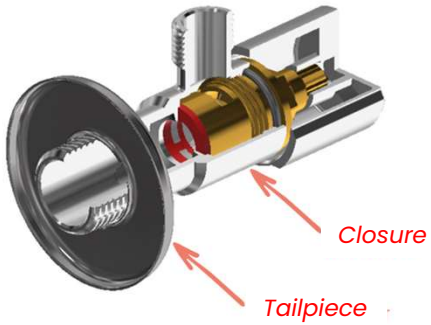

MAINLY MADE IN BRASS

Materials suitable for contact with water for human consumption.

STRUCTURE

CW617N body, high quality polished finish and protective aesthetic coating against deterioration and corrosion.

HANDLE

Metallic Al+Zn alloy with same finish as the body.

OPEN & CLOSE MECHANISM

CW617N brass with ceramic discs that protect the system against limescale

DURABILITY

Up to 500.000 actuation cycles with working temperatures changes up to 90ºC without leaks or structural failures.

TAILPIECE

Stainless Steel AISI-304.

tucai® Connecting for life

VALVES RANGE AND COLOR FINISHES

PREMIUM
C-850



Matte black
- ½" x ⅜"
- ½" x ½"



Antique bronze
- ½" x ⅜"
- ½" x ½"



Black steel
- ½" x ⅜"
- ½" x ½"



Rose gold
- ½" x ⅜"
- ½" x ½"



Matte white
- ½" x ⅜"
- ½" x ½"



Brushed steel
- ½" x ⅜"
- ½" x ½"



Gold
- ½" x ⅜"
- ½" x ½"



Chrome
- ½" x ⅜"

tucai®
Connecting for life

VALVES PRODUCT SHEET

PREMIUM C-850

DESIGN

- Elegant and modern design available in different color finishes to match with current kitchen and bathroom trends.
- Perfect match with TUCAI TAQ Premium hoses.
- Designed in Barcelona, according to product norms NF 077-10 & DIN 3227.

LEAK & MAINTENANCE FREE – LONG LIFE

- R+D & Quality tested in TUCAI Barcelona, inhouse manufacturing.
- Ceramic discs closure - 500.000 cycles according to product norm EN-200.
  - Anti lime-scale
  - Anti leak
  - ¼ turn soft hand-closure
- Finishing color coatings: electrostatic powder & electrolytic dipped
  - Anticorrosion barrier
  - Abrasion resistance
  - Easy to clean & anti fingerprint
- Chrome finish
  - High quality polished
  - Anticorrosion barrier
  - Abrasion resistance

LOW NOISE

- Library noise level (24dB ISO-3822)





TECHNICAL FEATURES

- PN16 ; 25bar 90°C ; 26l/min @3bar (ISO-3822)

MATERIALS

- Body: European CW617N brass – (4MS / UBA)(ACS)
- Metallic handle – Zamak
- Tailpiece: Stainless Steel AISI-304
- REACH & ROHS approved materials

EASY INSTALLATION

- Adjustable crescent wrench or 19mm wrench.
- Knurled inlet thread for easy application of standard plumbing tape.

tucai®
Connecting for life

PACKAGING

PREMIUM
Hoses & Valves







tucai®
Connecting for life

DISPLAYS

PREMIUM
Hoses & Valves



Floor stand 20+20

Professional distribution

Ref: 24764



Table stand 5+5

Hardware shops / DIY

Ref: 24763



Table stand 1+1

Hardware shops / DIY

Ref: 24762



Case with products

Sales force

Ref: 24752

tucai
Connecting for life

GRACIAS

tucai®
Connecting for life

